Santa Clara University
Scholar Commons

Music | College of Arts & Sciences

2003

K

Bruno Ruviaro
Santa Clara University, bruviaro@scu.edu

Follow this and additional works at: http://scholarcommons.scu.edu/music

 Part of the Composition Commons

Recommended Citation
Ruviaro, Bruno, "K" (2003). *Music*. 15.
http://scholarcommons.scu.edu/music/15

Premiered by So Percussion Ensemble: Douglas Perkins, Jason Treuting and Adam Sliwinski, at Dartmouth College, May 6, 2003. Tape part 1 & 2 are the fixed-media electronic parts only.

This work is licensed under a Creative Commons Attribution-NonCommercial-ShareAlike 3.0 Unported License.

This Score is brought to you for free and open access by the College of Arts & Sciences at Scholar Commons. It has been accepted for inclusion in Music by an authorized administrator of Scholar Commons. For more information, please contact rscroggin@scu.edu.

Bruno Ruviaro

K

(1999-2003)

piece for percussion and

electro-acoustic sounds

Bregman Studio at Dartmouth College, USA
Unicamp Electro-Acoustic Studio, Brazil

General Instructions

* The piece has three sections. The first and the third ones use percussion and electro-acoustic sounds (CD tracks 1 and 2, respectively). The middle section is live percussion only.
* First section: each player has independent metronomic markings. Simultaneous events are always indicated by a vertical dashed line.
* Second section: live percussion only; standard notation. The CD should be stopped during this section.
* Third section: Coda. CD track 2 along with live percussion.

Percussion sets:

PLAYER 1: marimba, high kettledrum (A), 3 tom-toms, snare drum, 3 woodblocks, suspended cymbal, bongo filled with beans, coins and keys.

PLAYER 2: glockenspiel, xylphone, tubular bells, kettledrum (Bb), 3 tom-toms, snare drum, 2 suspended cymbals, bamboo wind chimes, lion roar.

PLAYER 3: vibraphone, bass drum, 2 kettledrums (Bb, Db), 3 tom-toms, snare drum, 5 temple blocks, hi-hat, maraca.

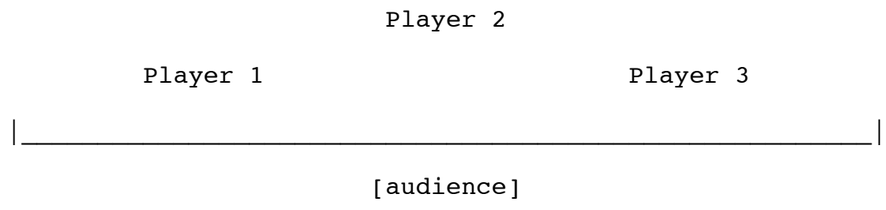

premiered on the 6th of May 2003, Spaulding Auditorium, Hopkins Center (Dartmouth College, NH, USA)

So Percussion Ensemble: Douglas Perkins, Jason Treuting and Adam Sliwinski

K

(1999-2003)

for percussion and electro-acoustic sounds

Bruno Ruviaro

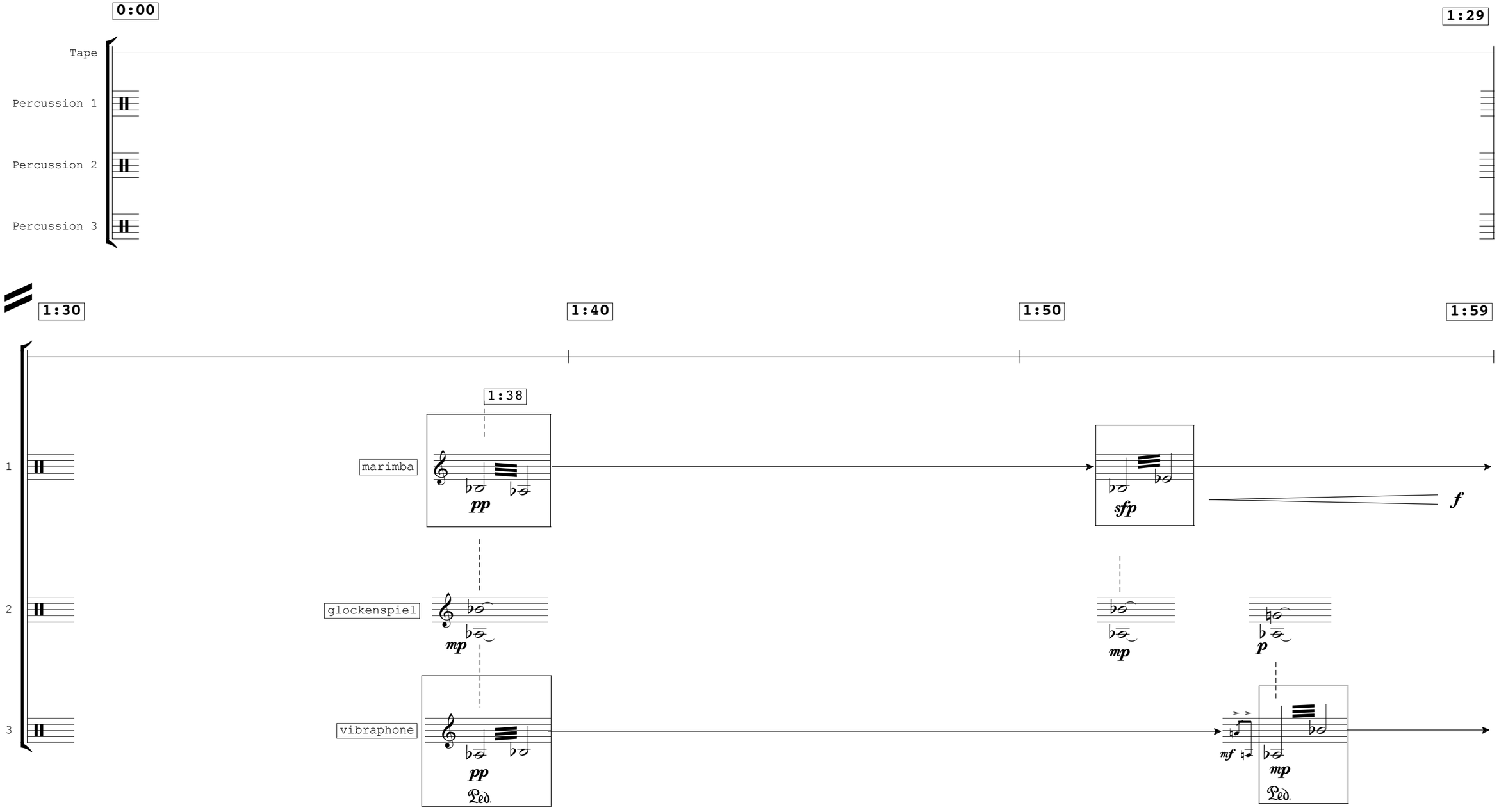

2:00 2:10 2:20 2:29

1

quasi *f* *p* *mf* senza dim. *mp* senza dim. *p* tremolo rall. (decelerating) ♩ = 112 *f* begin slower than previous eighth notes

2

♩ = 72 *mf*

3

p quasi *f* *sfp* Ped. *f* molto *mp* *p* tremolo rall. (decelerating) ♩ = 88 *f* dim.

2:30 2:40 2:50 2:59

1

begin slowly

f

mp

molto ***fp*** *subito*

♩ = 70

(total: 30 iterations)

fp ***f***

2

quasi ***f***

xylophone

fp

♩ = 70

(total: 30 iterations)

fp ***f***

3

3 3 3 3

p

✻ Ped.

fp

molto

♩ = 70

(total: 30 iterations)

fp ***f***

Ped.

3:00

3:20

3:26

3:29

tape: attack *ff*

1

♩ = 70

poco accel.

pp *p* *cresc. poco a poco*

quasi ***f***

f

♩ = 45

poco rit.

2

pp *mf* *(senza accel.)*

f

f

♩ = 80

3

pp *molto* ***f*** *mf*

quasi ***f***

poco Ped.

f

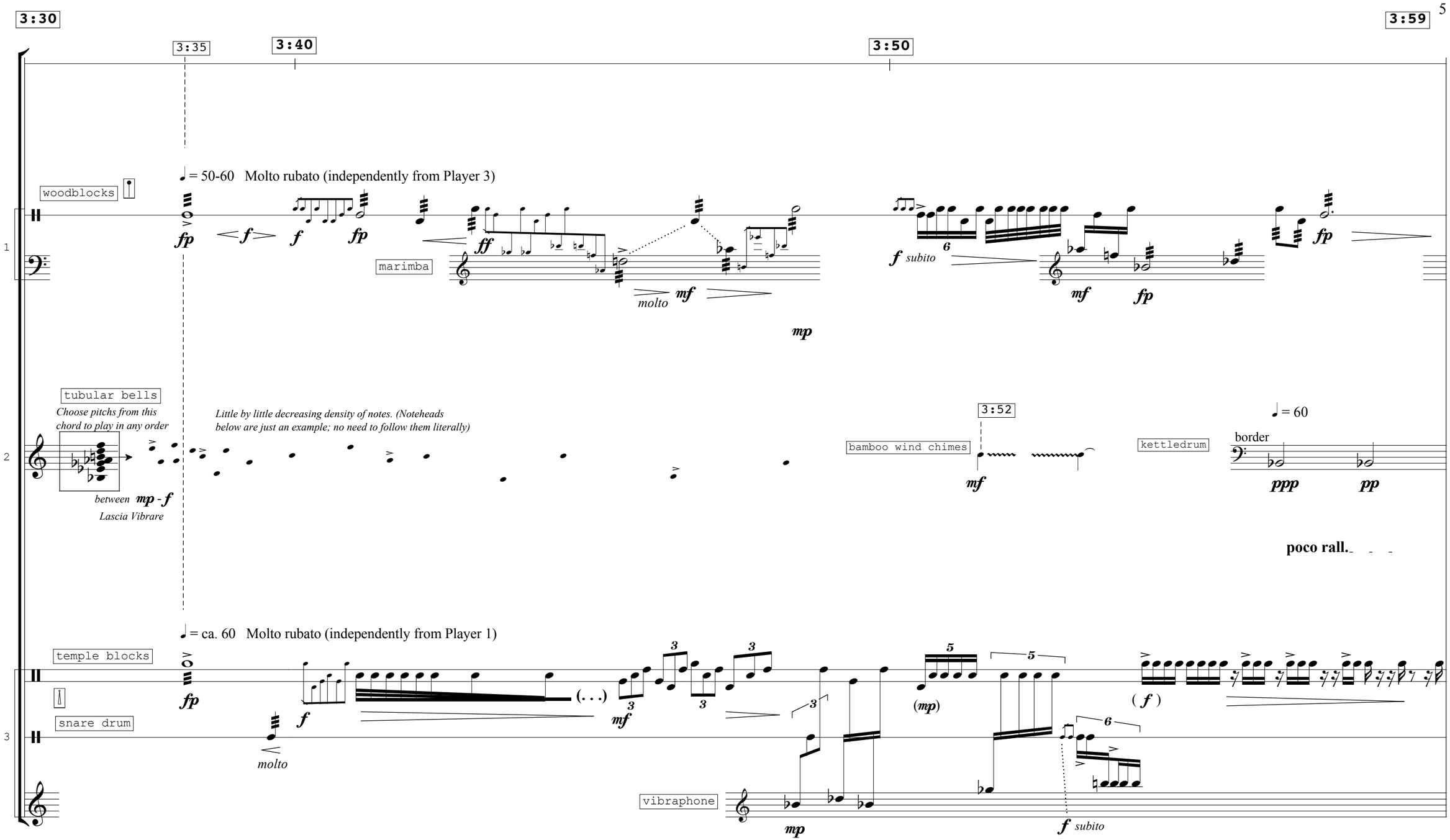
3:30
3:35
3:40
3:50
3:59
♩ = 50-60 Molto rubato (independently from Player 3)
woodblocks
marimba
molto
f subito
tubular bells
Choose pitchs from this chord to play in any order
between mp - f
Lascia Vibrare
Little by little decreasing density of notes. (Noteheads below are just an example; no need to follow them literally)
3:52
bamboo wind chimes
kettledrum
♩ = 60
border
poco rall.
♩ = ca. 60 Molto rubato (independently from Player 1)
temple blocks
snare drum
molto
vibraphone
f subito

4:00

4:29

1

= 40

(...)

poco accel.

= 60

3

pp

mf

mp

mf

2

bamboo wind chimes

p

(border)

(...little by little to center...)

(center)

mp

p

quasi f

mp

3

= 50

mf

f

tr

sfz

(...)

fp

p

mp

p

p

4:30

4:45

4:59

1

3

p

attack together with player 3,
but not necessarily with player 2

p

niente

fp

(...)

Chimes sounding gently and continuously - Alternate sometimes with silence

l.v.

tr

2

3

attack together with player 1,
but not necessarily with player 2

niente

CD STOP

1

3 tom-toms

♩ = 90

2

3

kettledrums

1

kettledrum

3 woodblocks

poco cresc.

2

snare drum

snares off

3

(back to Bb)

coperto

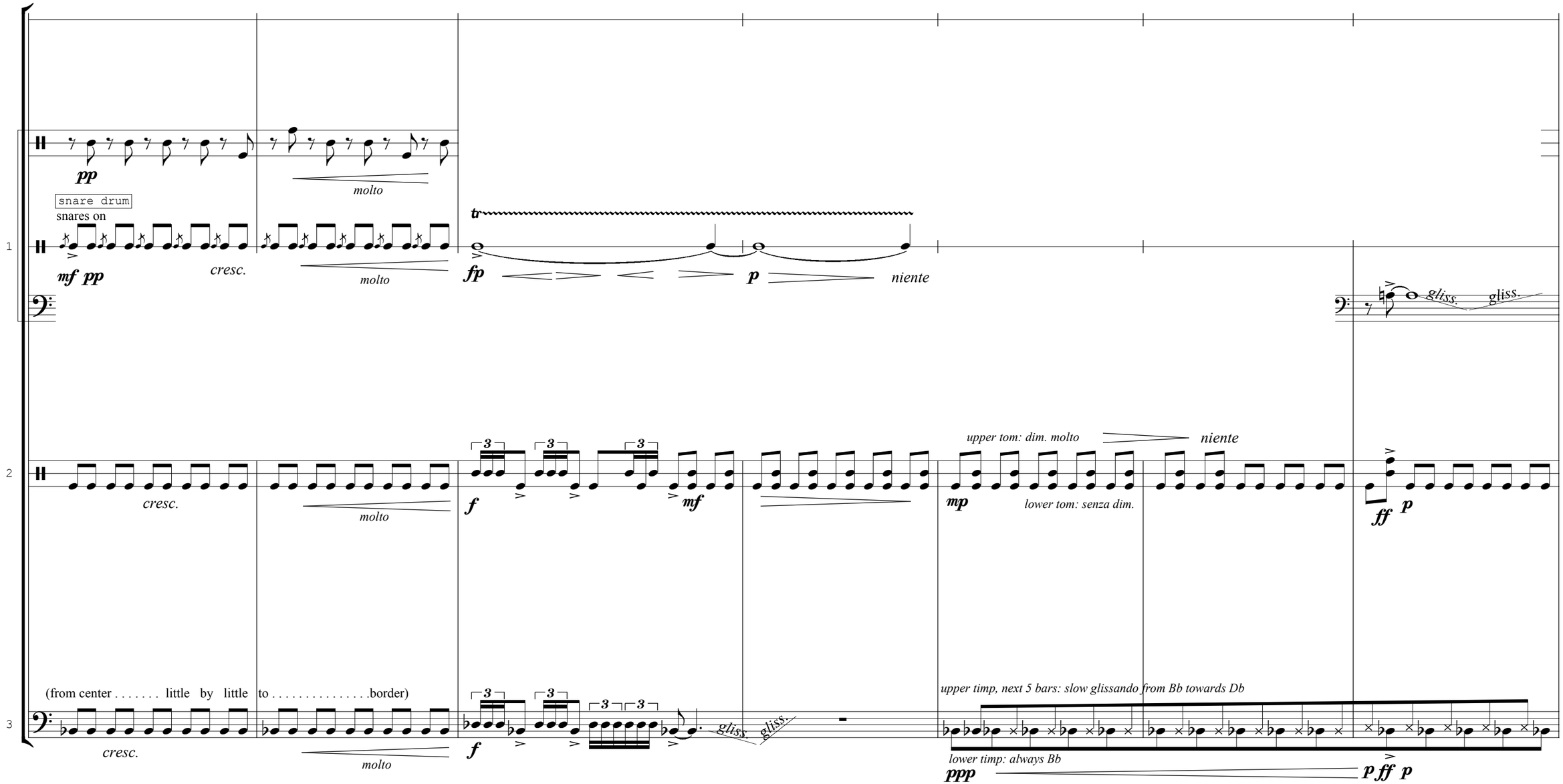
pp
molto
snare drum
snares on
mf pp
cresc.
molto
tr
fp
p
niente
gliss.
gliss.
cresc.
molto
f
mf
upper tom: dim. molto
niente
mp
lower tom: senza dim.
ff
p
(from center . . . . . little by little to . . . . . .border)
cresc.
molto
f
gliss.
gliss.
upper timp, next 5 bars: slow glissando from Bb towards Db
lower timp: always Bb
ppp
p ff p

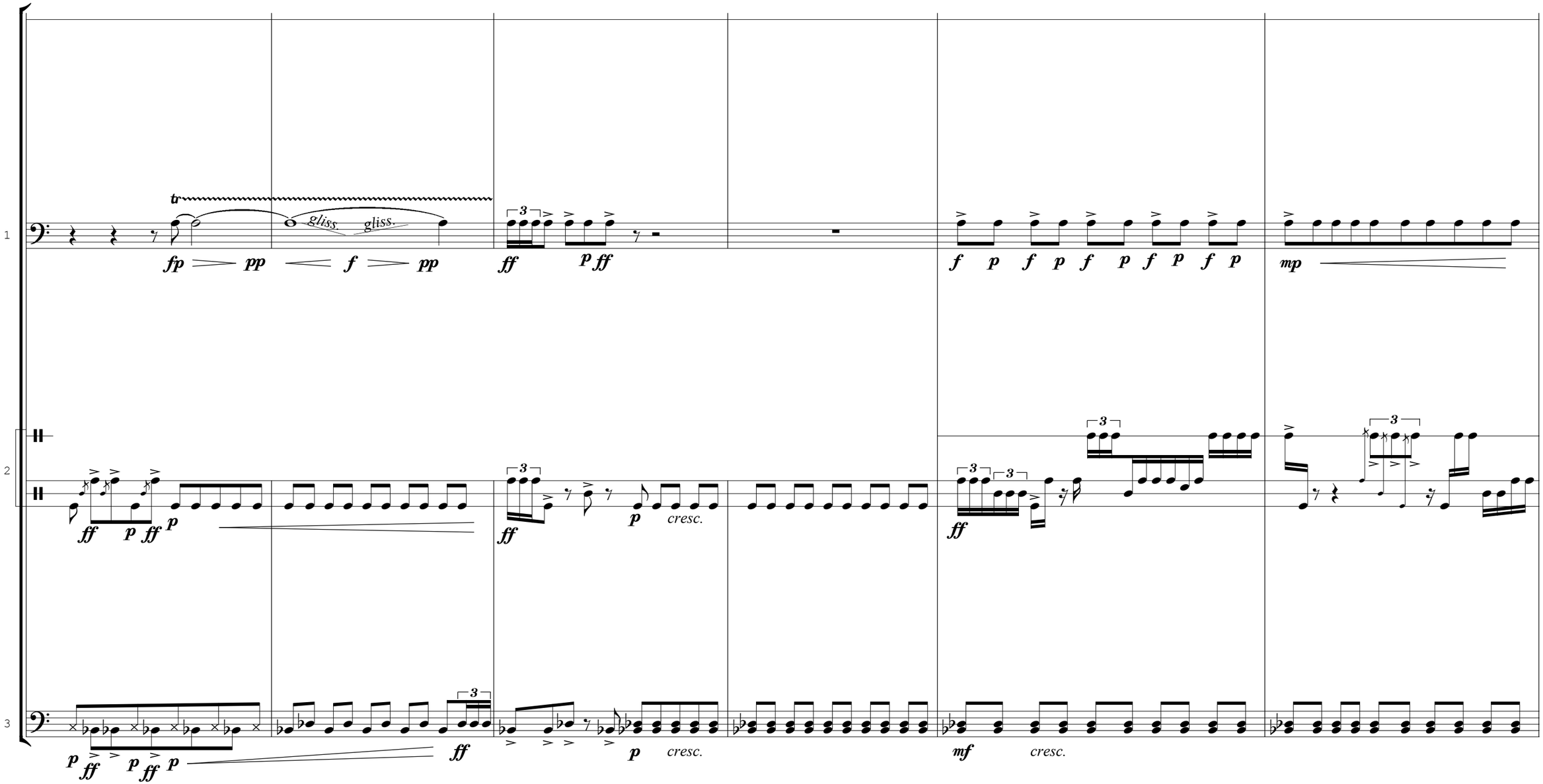
1
2
3
tr
gliss.
gliss.
fp
pp
f
pp
ff
p
ff
f
p
f
p
f
p
f
p
f
p
mp
ff
p
ff
p
ff
p
cresc.
ff
p
ff
p
ff
p
ff
p
cresc.
mf
cresc.

1

gliss.

gliss.

f

niente

f

3

3

3

2

susp. cymbal (low)

mf

ppp

susp. cymbal (high)

ff

f

mf

3

fp

fp

ff

gliss.

(back to Db)

ff

bass drum

sf

mf

cresc.

1

tr

fp

ff subito

mf

ff

mf

ff

2

3 3 3 3

mf

ff subito

mf

ff

mf

ff

3

cresc.

sf

ff subito

mf

ff

mf

ff

1

2

3

1

snare drum + 2 susp. cymbals

3 tom-toms

kettledrum

♩ = 110

mf

2

kettledrum

♩ = 110

mf

3

hi-hat

snare drum

3 tom-toms

kettledrums

bass drum

♩ = 110

mf

1

cresc.

sfz p subito

(p)

f p

f p cresc.

2

cresc.

quasi f p subito

cresc.

3

cresc.

sfz p subito

p

f

f p cresc.

1

sfz

dim. poco a poco

2

f

sfz

dim. poco a poco

3

sfz

f

dim. poco a poco

1

♩ = 90

f subito

sfz *sfz* *sfz*

molto

2

3 tom-toms

♩ = 90

f subito

sfz *sfz* *sfz*

molto

3

♩ = 90

f subito

sfz *sfz* *sfz*

molto

CD - TRACK 02

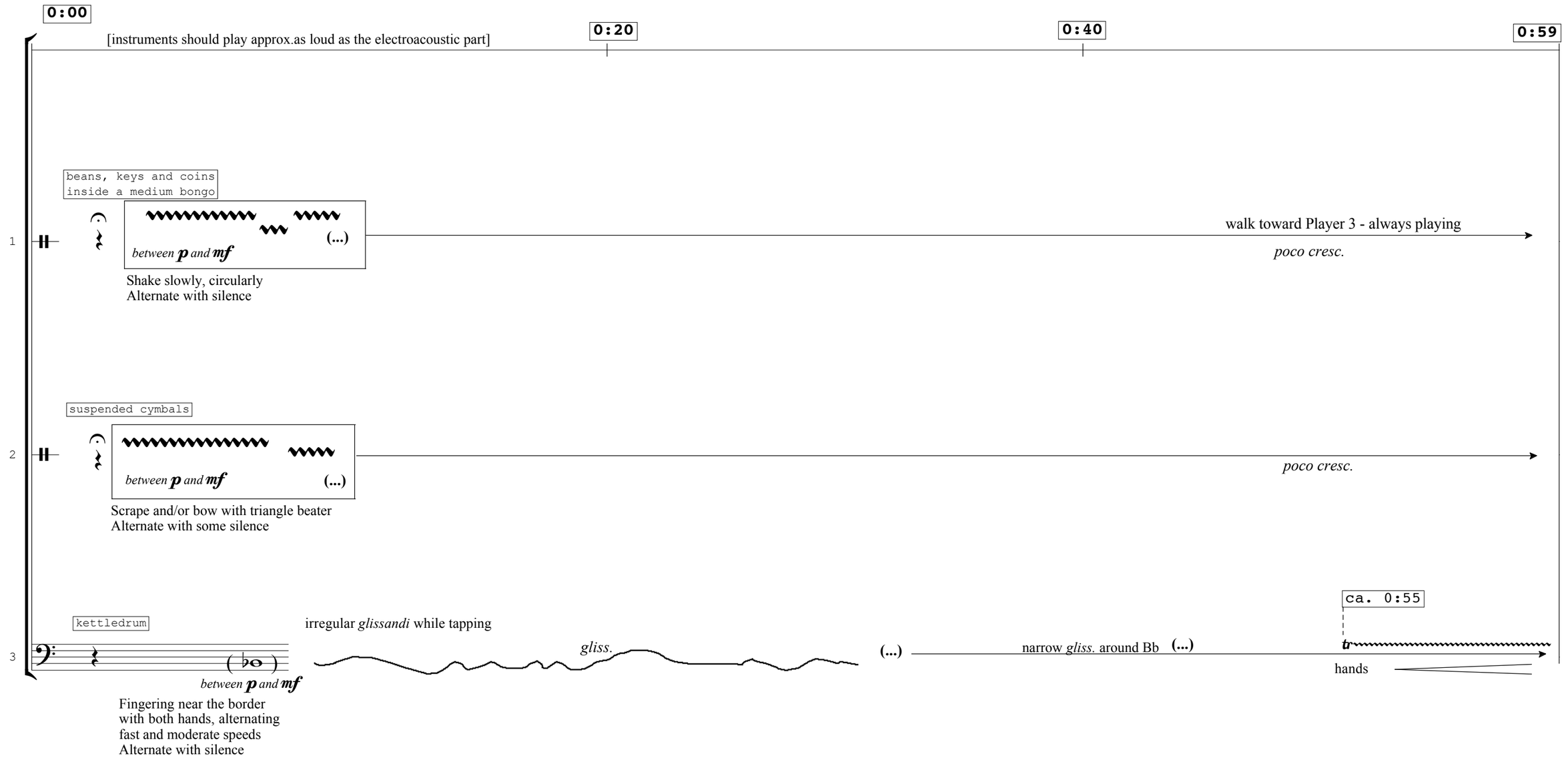
0:00
[instruments should play approx.as loud as the electroacoustic part]
0:20
0:40
0:59
beans, keys and coins
inside a medium bongo
1
between p and mf
(...)
Shake slowly, circularly
Alternate with silence
walk toward Player 3 - always playing
poco cresc.
suspended cymbals
2
between p and mf
(...)
Scrape and/or bow with triangle beater
Alternate with some silence
poco cresc.
kettledrum
irregular glissandi while tapping
3
between p and mf
gliss.
(...)
narrow gliss. around Bb
(...)
ca. 0:55
tr
hands
Fingering near the border
with both hands, alternating
fast and moderate speeds
Alternate with silence

1:00 1:20 1:40 2:15

LIGHTS FADING OUT for approx. 30 seconds, starting at ca. 2:00 of track 2. Instruments should keep playing for a few seconds after the tape is over, until complete darkness.

1

electro-acoustic part (cue):
glissando downwards

ca. 1:08

Noisily throw contents of bongo on player 3's kettledrum

Leave bongo there and take a maraca from player 3's set

Walk back to your place

maraca

mf (...) *p*

marimba

(...)

p *niente*

2

cymbals + tubular bells + bamboos chimes

scraping - hitting - shaking [triangle beater]

quasi ***f***

rall.

bamboo chimes

mp (...) *niente*

lion roar

(...)

keep playing

(disappearing)

slowly; short and long "roars"

p *niente*

3

♩ = 100

(hands)

quasi ***f***

start right upon the beans

molto rit.

niente

p *poco a poco dim.*